I:\06-050 Taunton Ave - Pleasant Street\CADD\06-050 SEPTIC 9-17-08.dwg 4/20/2009 10:07:10 AM EDT

Cross Section Through Septic System

NOT TO SCALE

ALL SYSTEM COMPONENTS SHALL BE MARKED WITH MAGNETIC MARKING TAPE PER CMR 310 15.221(12)

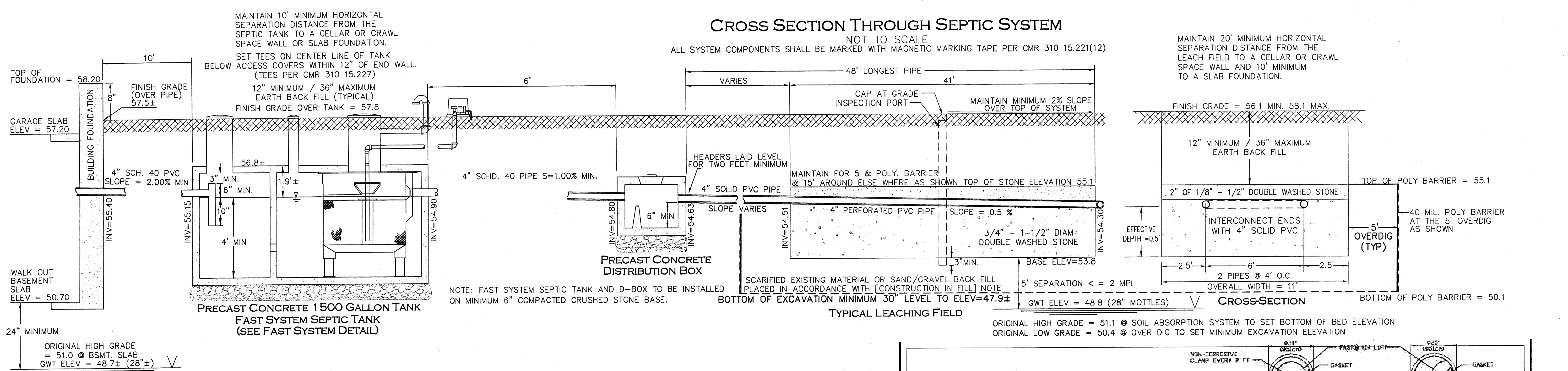

SIZE	A	B	C	V1	H	L1	W1	L2	W2
0.5	500 (GAL)	1000 (GAL)	24"	3"	50"	60"	30"	26"	15.5"

A = SETTLING ZONE (LIQUID CAPACITY)
B = FAST® CHAMBER (LIQUID CAPACITY)
C = INFLUENT APERTURE HEIGHT
V1 = VENT SIZE (MINIMUM)
H = FAST® HEIGHT
L1 = FAST ® LENGTH (TOTAL)
L2 = FAST ® LENGTH FROM BACK TO AIR LIFT
W1 = FAST® WIDTH (TOTAL)
W2 = FAST® WIDTH TO AIR LIFT

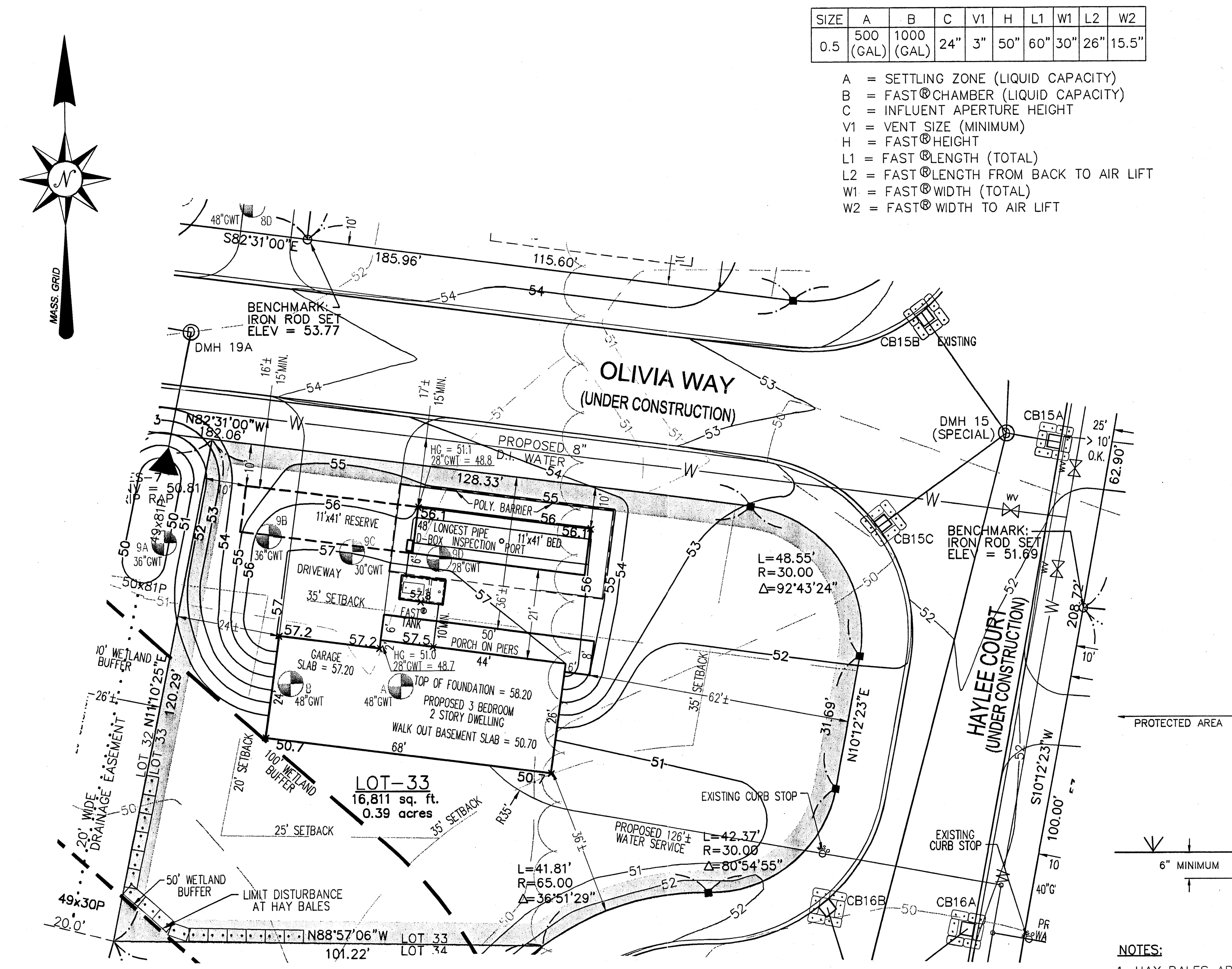

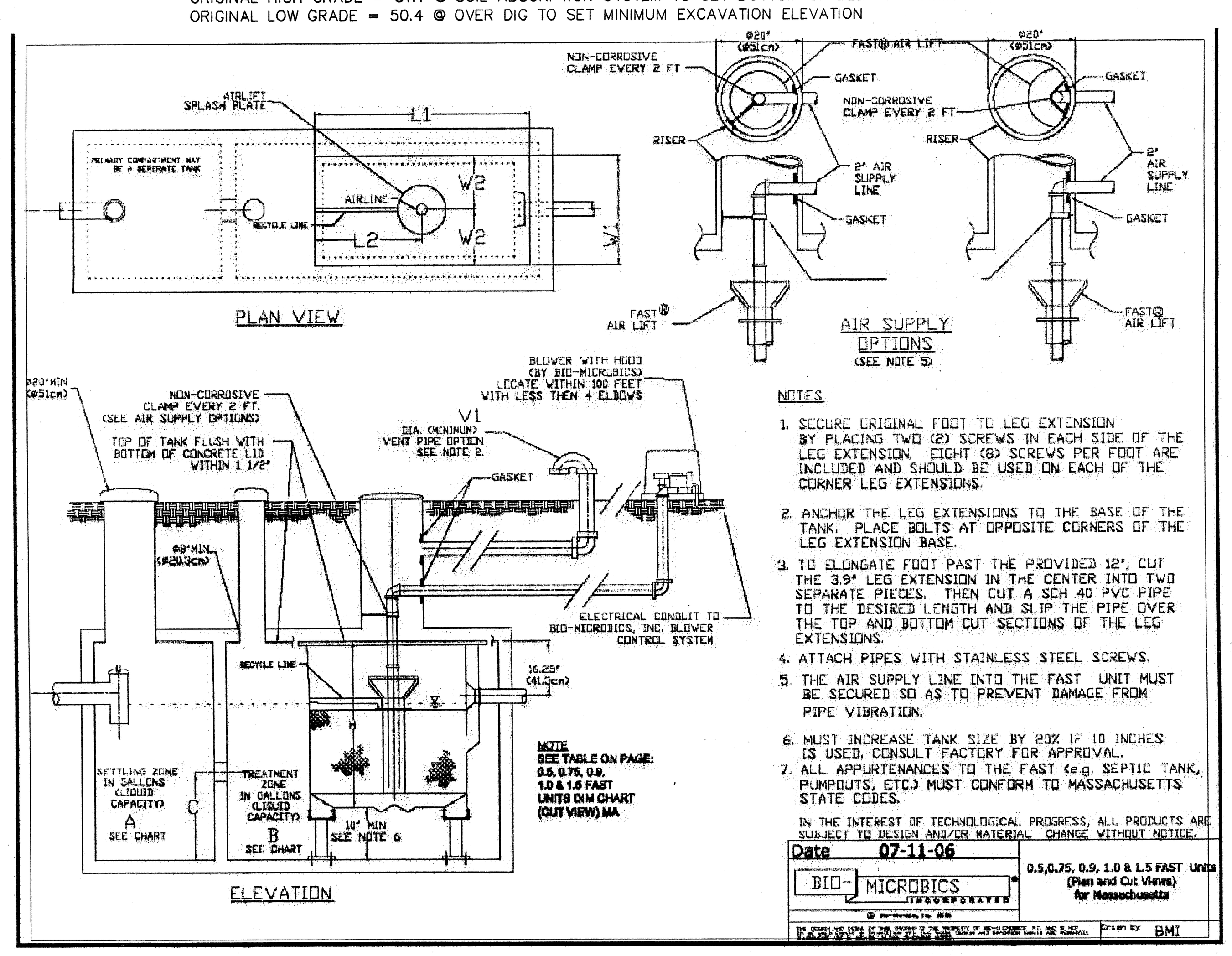

Fast System Detail (Follow Manufactures Specifications)

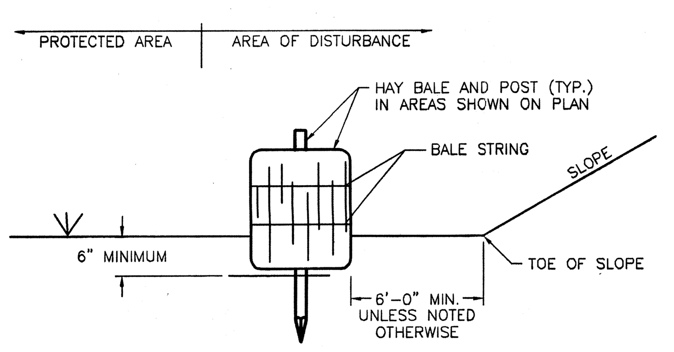

NOTES:

1. HAY BALES ARE TO BE PLACED WITHIN A 6" MINIMUM TRENCH PRIOR TO CONSTRUCTION.
2. THOROUGHLY COMPACT EXCAVATED SOILS BACK INTO THE TRENCH AFTER INSTALLATION OF EROSION CONTROL DEVICES.
3. BALE STRING SHALL BE LAID PARALLEL TO THE GROUND SURFACE.
4. EACH BALE TO BE SECURELY STAKED INTO THE GROUND WITH (2) 1"x1"x3' OAK BEAN POLE.
5. CONTRACTOR IS RESPONSIBLE TO MAINTAIN INTEGRITY OF HAY BALE LINE FOR DURATION OF CONSTRUCTION.
6. EROSION CONTROLS TO REMAIN UNTIL SOIL CONDITIONS STABILIZE.
7. LOOSE HAY TO BE SPREAD ON AREAS OF EXPOSED LOAM & SEED UNTIL GERMINATION AND STABILATION OCCURS.

Hay Bale Detail

(NOT TO SCALE)

Legend

SOIL TEST PIT — TP
ORIGINAL CONTOUR — 100
PROPOSED CONTOUR — 100
PROPOSED SPOT ELEVATION — x100
HIGHEST ORIGINAL GRADE — HG = 51.0 (@ BSMT. SLAB); HG = 51.1 (@ LEACHING FIELD)
DESIGN GROUND WATER TABLE — 28"GWT = 48.7 (@ BSMT. SLAB); 28"GWT = 48.8 (@ LEACHING FIELD)

Graphic Scale

20 0 10 20 40 80

1 INCH = 20 FEET

Deep Observation Hole 9B

DEPTH	HORIZON	TEXTURE	COLOR	MOTTLING	OTHER
0-12"	A	SL	10 YR 3/2	–	–
12-22"	B	LS	10 YR 5/4	–	–
22-120"	C	S	2.5 Y 6/4	36" 7.5 YR 5/8	–

OBSERVED GROUND WATER: 36" STANDING, 36" WEEPING — DATE: 1-10-07
ESTIMATED HIGH GROUND WATER: 36" — BY: M. FARIA
NO PERC. TEST PERFORMED — WITNESS: J.R.

Deep Observation Hole 9C

DEPTH	HORIZON	TEXTURE	COLOR	MOTTLING	OTHER
0-10"	A	SL	10 YR 3/2	–	–
10-18"	B	LS	10 YR 5/4	–	–
18-120"	C	S	2.5 Y 6/4	30" 7.5 YR 5/8	–

OBSERVED GROUND WATER: 30" STANDING, 30" WEEPING — DATE: 1-10-07
ESTIMATED HIGH GROUND WATER: 30" — BY: M. FARIA
PERC. RATE @ 28" = < 2 MPI — WITNESS: J.R.

Deep Observation Hole 9D

DEPTH	HORIZON	TEXTURE	COLOR	MOTTLING	OTHER
0-10"	A	SL	10 YR 3/2	–	–
10-18"	B	LS	10 YR 5/4	–	–
18-120"	C	S	2.5 Y 6/4	28" 7.5 YR 5/8	–

OBSERVED GROUND WATER: 28" STANDING, 28" WEEPING — DATE: 1-10-07
ESTIMATED HIGH GROUND WATER: 28" — BY: M. FARIA
NO PERC. TEST PERFORMED — WITNESS: J.R.

Deep Observation Hole 33A

DEPTH	HORIZON	TEXTURE	COLOR	MOTTLING	OTHER
0-12"	Ap	SL	10 YR 3/2	–	–
12-24"	B	LS	10 YR 5/6	–	–
24-120"	C	F-MS	2.5 Y 6/3&2	48" 7.5 YR 5/8	STRATIFIED

OBSERVED GROUND WATER: 72" STANDING, 60" WEEPING — DATE: 7-18-07
ESTIMATED HIGH GROUND WATER: 48" — BY: M. FARIA
NO PERC. TEST PERFORMED — WITNESS: J.R.

Deep Observation Hole 33B

DEPTH	HORIZON	TEXTURE	COLOR	MOTTLING	OTHER
0-12"	Ap	SL	10 YR 3/2	–	–
12-24"	B	LS	10 YR 5/6	–	–
24-120"	C	F-MS	2.5 Y 6/3&2	48" 7.5 YR 5/8	STRATIFIED

OBSERVED GROUND WATER: 72" STANDING, 60" WEEPING — DATE: 7-18-07
ESTIMATED HIGH GROUND WATER: 48" — BY: M. FARIA
PERC. RATE @ 60" = < 2 MPI — WITNESS: J.R.

Soil Evaluation & Perc Results

Location (Not to Scale) Map

Notes & Specifications

THIS PLAN HAS BEEN PREPARED IN ACCORDANCE WITH THE RULES AND REGULATIONS OF 310 CMR 15 (TITLE V) OF THE COMMONWEALTH OF MASSACHUSETTS AND THOSE OF THE TOWN BOARD OF HEALTH.

THE REQUIRED INSPECTION SCHEDULE DURING THE PROCESS OF CONSTRUCTION SHALL BE ARRANGED BY THE CONTRACTOR WITH THE BOARD OF HEALTH & DESIGN ENGINEER PRIOR TO THE COMMENCEMENT OF CONSTRUCTION.

1500 GALLON FAST SYSTEM SEPTIC TANK AND DISTRIBUTION BOX SHALL BE STANDARD DUTY DESIGN AS MANUFACTURED BY ROTONDO & SONS, INC. OR APPROVED EQUAL.

ALL PIPING SHALL BE 4" DIA. SCHD. 40 NSF PVC, WITH ALL JOINTS SEALED WATERTIGHT.

ALL STONE SHALL BE DOUBLE WASHED AND FREE OF IRONS, CLAY OR FINES AND SHALL BE SATISFACTORY TO THE TOWN BOARD OF HEALTH.

THIS SYSTEM IS NOT DESIGNED TO ACCOMMODATE A GARBAGE DISPOSAL OR OTHER HIGH WATER USE UNITS.

THE PROPOSED SEPTIC SYSTEM IS NOT LOCATED WITHIN THE CONE OF INFLUENCE OF ANY MUNICIPAL WELL NOR ARE THERE ANY PRIVATE WELLS LOCATED WITHIN 100 FEET (RADIAL) OF THE PROPOSED SYSTEM.

EXCAVATE ALL TOP, SUB AND ANY OTHER SOILS ENCOUNTERED DOWN TO THE BOTTOM OF EXCAVATION (SEE CROSS SECTION) AND FOR A HORIZONTAL DISTANCE OF 5' ON ALL SIDES OF THE PROPOSED SYSTEM. BACK FILL TO TOP OF STONE ELEVATION WITH SELECT ON SITE OR IMPORTED SOIL MATERIAL CONSISTING OF CLEAN GRANULAR SAND, FREE OF ORGANIC MATTER OR OTHER DELETERIOUS SUBSTANCES AND MEETING THE SIEVE SIZE REQUIREMENTS OF 310 CMR 15.255(3) & (5) [CONSTRUCTION IN FILL].

ELEVATIONS SHOWN ON THIS PLAN ARE BASED ON NGVD 29.

CONTRACTOR SHALL VERIFY EXISTING CONDITIONS AND NOTIFY THE ENGINEER OF ANY DISCREPANCIES PRIOR TO THE CONTINUATION OF CONSTRUCTION.

WATER TABLE FLUCTUATES ANNUALLY, NO WARRANTEE OF A DRY BASEMENT IS EXPRESSED OR IMPLIED.

THE PROPOSED WORK DOES NOT LIE IN A CRITICAL FLOOD HAZARD ZONE.

THE LOT DOES NOT LIE IN AN OVERLAY DISTRICT FOR GROUNDWATER AQUIFER PROTECTION.

THE SITE IS UNDER CONSTRUCTION, DUE TO THE POSSIBILITY OF THE BENCHMARK STAKE SHIFTING DURING CONSTRUCTION. THE CONTRACTOR IS TO VERIFY THE BENCHMARK WITH THE SURVEYOR PRIOR TO CONSTRUCTION.

MAINTAIN 15' MINIMUM SEPARATION FROM WATER SERVICE TO PROPOSED SEPTIC COMPONENTS.

HOUSE DIMENSIONS, ELEVATION AND LOCATION ARE APPROXIMATE AND SUBJECT TO CHANGE, CONTRACTOR TO VERIFY PRIOR TO CONSTRUCTION.

THE LOT LIES IN A R-1 ZONING DISTRICT.
FRONT YARD SETBACK: 35'
SIDE YARD SETBACK: 15' + 5'/STORY
REAR YARD SETBACK: 25'

REFERENCE: DEFINITIVE SUBDIVISION PLAN FOR FALL RIVER AVENUE DEVELOPMENT PARTNERS, LLC, "BANNA ESTATES" TAUNTON AVENUE/PLEASANT STREET, SEEKONK, MA. DATED; AUGUST 2, 2007, REVISED; MAY 27, 2008. BY INSITE ENGINEERING SERVICES, LLC.

TIE INTO PROPOSED CONTOURS AND ELEVATIONS AS SHOWN IN THE ABOVE REFERENCE.

I CERTIFY THAT THE PROPOSED WATER SERVICE SHOWN ON THIS PLAN IS IN ACCORDANCE WITH THE RULES AND REGULATIONS OF THE SEEKONK WATER DISTRICT. THE CONTRACTOR IS TO COORDINATE THE WATER SERVICE TIE IN WITH THE WATER AUTHORITY AND INSTALL THE WATER SERVICE WITH MAGNETIC MARKING TAPE ABOVE THE ENTIRE LENGTH OF THE WATER SERVICE.

REFER TO CONSERVATION FILINGS FOR WORK WITHIN WETLAND BUFFER.

Design Calculations

Average Daily Sewage Flow (gallons per day):
PROPOSED 3 BEDROOM DWELLING @ 110 GPD PER BEDROOM =330 GPD

Septic Tank Sizing (gallons):
200% AVERAGE DAILY FLOW = 2 (330) = 660 GALLONS
3 BEDROOM HOME REQUIRES 1500 GALLON TANK (MINIMUM).

Leaching Area Calculation:
SOIL CLASS I (SAND)
PERC RATE IN 9C WAS < 2 MPI
PERC RATE IN 33B WAS < 2 MPI
DESIGN FOR 5 MPI PER TITLE V

Required Minimum Leaching Area:
REQUIRED AREA = 330 GPD / 0.74 GPD / SF = 446 SF MINIMUM
LEACHING FIELD BED: 11' x 41' = 451 SF
RESERVE AREA: 11' x 41' = 451 SF

Received APR 2 4 2009 Con. Comm.

RDA 2010-9

Septic System Design and RDA Plan

"BANNA ESTATES"
#0 OLIVIA WAY, SEEKONK, MA. 02771
AP 20 LOT 642 (RECORD LOT 33)

Applicant: MERIDIAN CUSTOM HOMES
1 RICHMOND SQUARE, SUITE 117C, PROVIDENCE, RI 02906

Job #	Scale:	Design By:	Date:
06-050-33	1"=20	MSF	APRIL 14, 2009

Revised:

PAUL D. CARLSON CIVIL NO. 40995 — COMMONWEALTH OF MASSACHUSETTS — REGISTERED PROFESSIONAL ENGINEER

PROFESSIONAL SEAL

INSITE Engineering Services, LLC
PROFESSIONAL ENGINEERS AND LAND SURVEYORS
INSITE PROFESSIONAL COMPLEX, SUITE 1
1539 FALL RIVER AVENUE
SEEKONK, MA 02771
PHONE: (508) 336-4500
FAX: (508) 336-4558

SHEET 1 OF 1