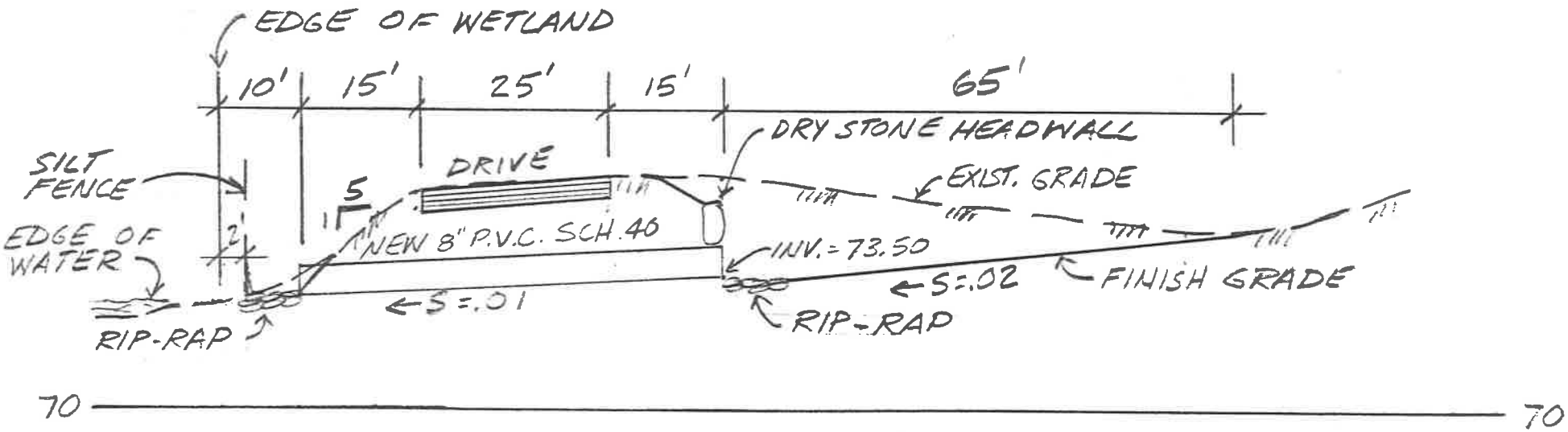

DRAIN PROFILE

SCALE: HOR.: 1"=20'
VERT.: 1"=4'