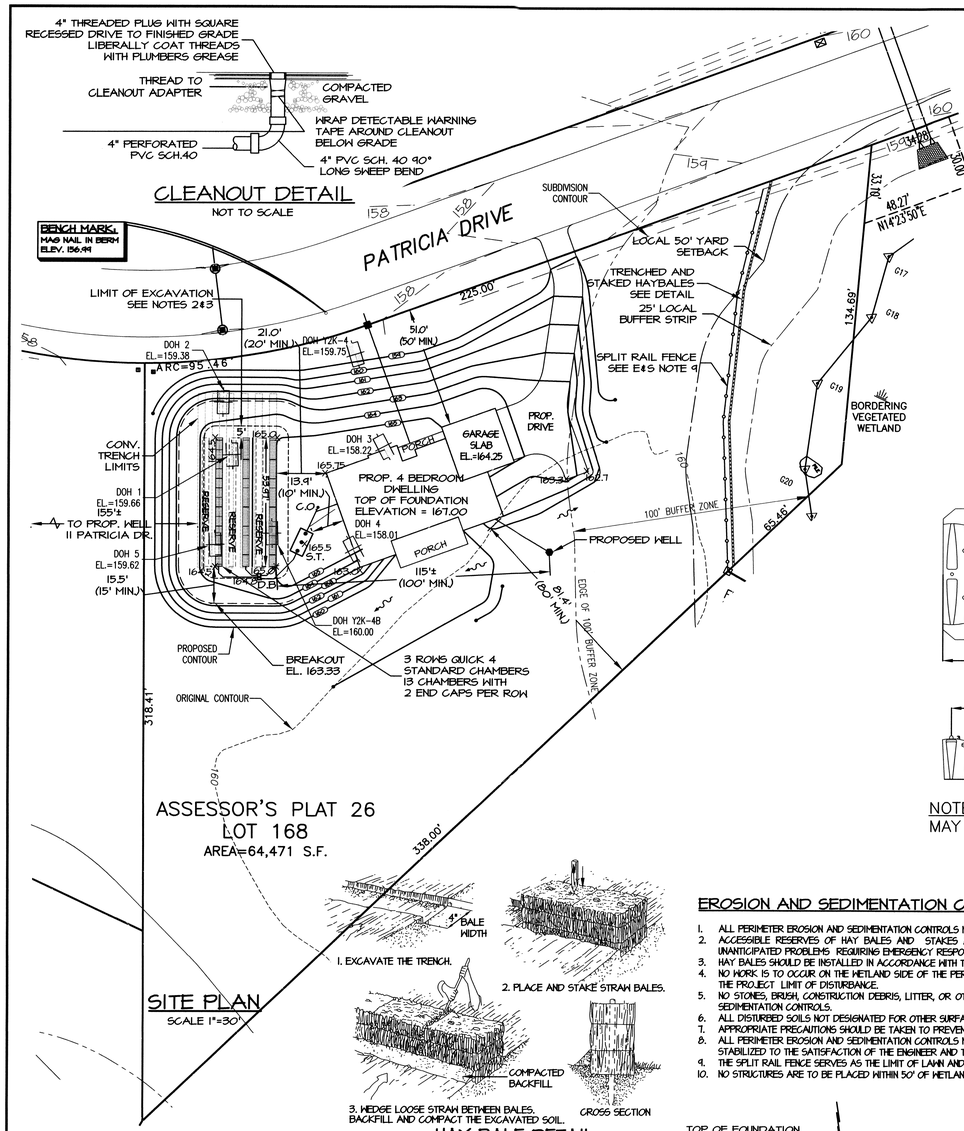

HAY BALE DETAIL

DESIGN DATA

DAILY SEWAGE FLOW
- 4 BEDROOMS
- DAILY FLOW = 110 GAL/BEDROOM =440 GALLONS PER DAY

SEPTIC TANK REQUIREMENTS
- VOLUME = 2 x DAILY FLOW = 880 GALLONS
- USE 1500 GALLON SEPTIC TANK

LEACHING AREA REQUIREMENTS
- PERCOLATION RATE = 24 MINUTES PER INCH (DOH 5)
- DESIGN FOR 25 MINUTES PER INCH - SOIL TEXTURE CLASS II
- EFFLUENT LOADING RATE = 0.40 GAL. PER S.F.
- USE INFILTRATOR QUICK 4 STANDARD CHAMBERS - INV. - 8"
- CHAMBERS IN TRENCH CONFIGURATION - EFFECTIVE LEACHING AREA = 6.96 SF/LF
- PROVIDE 3 ROWS WITH 13 CHAMBERS PER ROW - 39 UNITS
- TOTAL LEACHING AREA
  = 39 CHAMBERS X 4 LF/CHAMBER + 6 END CAP X 0.48 LF/CAP = 161.9 LF

TOTAL LEACHING CAPACITY = 161.9 LF X 6.96 SF/LF = 1127 S.F.
- 1127 SF. X 0.40 GAL/SF = 451 GAL/DAY > 440 GPD

CONVENTIONAL DESIGN DATA

LEACHING AREA REQUIREMENTS
- PERCOLATION RATE = 24 MINUTES PER INCH DOH 5
- DESIGN FOR 25 MINUTES PER INCH - SOIL TEXTURE CLASS II
- 3 TRENCHES, 1.0' DEEP, 13' LONG (WITH RESERVE BETWEEN)
- EFFLUENT LOADING RATE = 0.40 GALLONS PER SQUARE FOOT
- SIDEWALL AREA = [(2 X 13') + (2 X 3')] X 1.0' X 3 TRENCHES = 456 S. F.
- BOTTOM AREA = 13' x 3' X 3 TRENCHES = 651 SQUARE FEET
- TOTAL LEACHING AREA=1113 SQUARE FEET

TOTAL LEACHING CAPACITY=1113.94 S. F. x 0.40 GAL/DAY/S.F.= 445 GAL./DAY<440 GPD

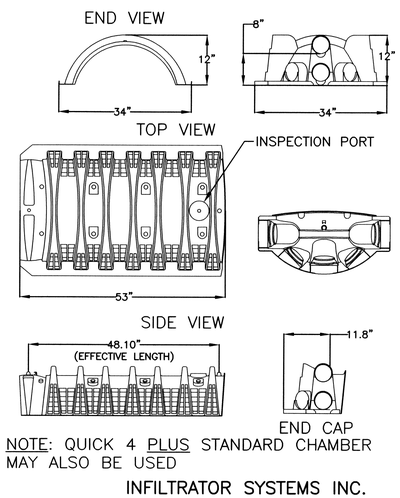

NOTE: QUICK 4 PLUS STANDARD CHAMBER MAY ALSO BE USED

INFILTRATOR SYSTEMS INC.
QUICK4 STANDARD CHAMBER
(NOT TO SCALE)

EROSION AND SEDIMENTATION CONTROL NOTES:

1. ALL PERIMETER EROSION AND SEDIMENTATION CONTROLS MUST BE INSTALLED PRIOR TO THE COMMENCEMENT OF EARTHWORK.
2. ACCESSIBLE RESERVES OF HAY BALES AND STAKES ARE TO BE MAINTAINED ON SITE FOR ROUTINE MAINTENANCE AND IN THE EVENT OF UNANTICIPATED PROBLEMS REQUIRING EMERGENCY RESPONSE.
3. HAY BALES SHOULD BE INSTALLED IN ACCORDANCE WITH THE DETAILS PROVIDED.
4. NO WORK IS TO OCCUR ON THE WETLAND SIDE OF THE PERIMETER EROSION AND SEDIMENTATION CONTROLS. ALL PERIMETER CONTROLS SERVE AS THE PROJECT LIMIT OF DISTURBANCE.
5. NO STONES, BRUSH, CONSTRUCTION DEBRIS, LITTER, OR OTHER MATERIALS ARE TO BE DEPOSITED ON THE WETLAND SIDE OF THE EROSION AND SEDIMENTATION CONTROLS.
6. ALL DISTURBED SOILS NOT DESIGNATED FOR OTHER SURFACE TREATMENT ARE TO BE LOAMED & SEEDED IMMEDIATELY FOLLOWING FINAL GRADING.
7. APPROPRIATE PRECAUTIONS SHOULD BE TAKEN TO PREVENT THE TRANSPORT OF SOIL OFFSITE FROM CONSTRUCTION EQUIPMENT.
8. ALL PERIMETER EROSION AND SEDIMENTATION CONTROLS MUST BE PROPERLY MAINTAINED AND MUST REMAIN IN PLACE UNTIL THE SOILS HAVE BEEN STABILIZED TO THE SATISFACTION OF THE ENGINEER AND THE SEEKONK CONSERVATION COMMISSION.
9. THE SPLIT RAIL FENCE SERVES AS THE LIMIT OF LAWN AND FUTURE YARD ACTIVITIES AND SHALL BE PERMANENTLY MAINTAINED IN GOOD CONDITION.
10. NO STRUCTURES ARE TO BE PLACED WITHIN 50' OF WETLAND.

LOT 12 – DEEP OBSERVATION HOLE 1
ORIGINAL ELEVATION – 158.22

DEPTH	HORIZON	TEXTURE	COLOR	MOTTLING	STRUCTURE	CONSISTENCE	OTHER
0 – 8"	A	SANDY LOAM	10 YR 3/3		MASSIVE	FRIABLE	GRAVELLY
8" – 24"	Bw	SANDY LOAM	10 YR 4/6		MASSIVE	FRIABLE	GRAVELLY
24" – 32"	Cd1	SANDY LOAM	2.5 Y 4/3		MASSIVE	FIRM	GRAVELLY, COBBLY
32" – 120"	Cd2	SANDY LOAM	2.5 Y 4/3	@ 35" COMM., DIST., COARSE	MASSIVE	FRIABLE	GRAVELLY, COBBLY, STONY W/POCKETS OF LOAMY SAND
120"	R						BOULDERS / LEDGE

OBSERVED STANDING GROUNDWATER – NONE
ESTIMATED SEASONAL HIGH GW – 35" (ELEV. 155.30)
REMOVE TO INTO Cd2 HORIZON
OBSERVED WEEPING GROUNDWATER – NONE
PERC. @ 44" + 18" = 1 MPI
DESIGN FOR CLASS II SOIL

LOT 12 – DEEP OBSERVATION HOLE 2
ORIGINAL ELEVATION – 159.38

DEPTH	HORIZON	TEXTURE	COLOR	MOTTLING	STRUCTURE	CONSISTENCE	OTHER
0 – 9"	A	SANDY LOAM	10 YR 3/3		MASSIVE	FRIABLE	GRAVELLY
9" – 26"	Bw	SANDY LOAM	10 YR 4/6		MASSIVE	FRIABLE	GRAVELLY
26" – 35"	Cd1	SANDY LOAM	2.5 Y 4/4	@ 43" COMM., DIST., COARSE	MASSIVE	FRIABLE	GRAVELLY, COBBLY, STONY
35" – 130"	Cd2	SANDY LOAM	2.5 Y 4/3		MASSIVE	FRIABLE	GRAVELLY, COBBLY, STONY W/POCKETS OF LOAMY SAND

OBSERVED STANDING GROUNDWATER – NONE
ESTIMATED SEASONAL HIGH GW – 43" (ELEV. 155.80)
OBSERVED WEEPING GROUNDWATER – NONE
REMOVE TO INTO Cd HORIZON
DESIGN FOR CLASS II SOIL

LOT 12 – DEEP OBSERVATION HOLE 5
ORIGINAL ELEVATION – 159.62

DEPTH	HORIZON	TEXTURE	COLOR	MOTTLING	STRUCTURE	CONSISTENCE	OTHER
0 – 9"	A	SANDY LOAM	10 YR 3/3		MASSIVE	FRIABLE	GRAVELLY
9" – 31"	Bw	SANDY LOAM	10 YR 4/6		MASSIVE	FRIABLE	GRAVELLY
31" – 93"	Cd1	SANDY LOAM	3.5 Y 4/4	@ 40" COMM., DIST., COARSE	MASSIVE	FRIABLE	GRAVELLY, COBBLY
93" – 120"	Cd2	SANDY LOAM	2.5 Y 4/3		MASSIVE	FIRM	GRAVELLY, COBBLY, VERY STONY, BOULDERS

OBSERVED STANDING GROUNDWATER – NONE
ESTIMATED SEASONAL HIGH GW – 28" (ELEV. 157.28)
REMOVE TO INTO Cd1 HORIZON
OBSERVED WEEPING GROUNDWATER – NONE
PERC. @ 42" + 18" = 24 MPI
DESIGN FOR CLASS II SOIL

NOTE:
DOH 3 AND DOH 4 UPPER C HORIZONS WERE FOUND TO HAVE SANDY LOAM, MASSIVE AND FIRM TO DEPTHS OF 112" IN DOH 3 AND 96" IN DOH 4. A PERC. TEST PERFORMED IN THIS SOIL AT DOH 3 WAS RUN, BUT NOT COMPLETED. THE RATE FOR THIS PERC. WAS RUNNING AT APPROXIMATELY 50 MPI. THE HORIZON BELOW THIS SOIL WAS FOUND TO CONTAIN MORE SAND AND BE MORE FRIABLE, BUT THE SOIL WAS TOO WET TO ATTEMPT A PERCOLATION TEST AT THIS TIME.
WITNESS: BETH HALLAL, SEEKONK BOARD OF HEALTH
TESTING PERFORMED BY: CAPUTO AND WICK LTD. DATE OF SOIL TEST – OCTOBER 17, 2013

LOT 12 – DEEP OBSERVATION HOLE Y2K-4
ORIGINAL ELEVATION – 159.75

DEPTH	HORIZON	TEXTURE	COLOR	MOTTLING	STRUCTURE	CONSISTENCE	OTHER
+3 – 0"	O	–	–		–	–	–
0" –3"	A	SANDY LOAM	10 YR 4/6		–	–	–
3" – 27"	B	SANDY LOAM	10 YR 5/8		–	–	–
27" – 80"	C1	LOAMY SAND	2.5 Y 6/4	–	–	–	5% GRAVEL
80" – 122"	Cd2	SANDY LOAM	2.5 Y 5/3	COMM., 10YR 6/8 &2 .5 Y 8/1			BASIL(SIC)

OBSERVED GROUNDWATER – NONE
MOTTLES @ 83" (ELEV. 152.83)
PERC. RATE = 7 MPI @ 45"
WEEPING FROM PIT FACE – NONE
ESTIMATED S.H.G.W. = 63" (ELEV. 154.5)
DATE OF TESTING – 9/25/00
GROUNDWATER READING 3/23/2001 – 63" (ELEV. 154.5)

LOT 12 – DEEP OBSERVATION HOLE Y2K-4B
ORIGINAL ELEVATION – 160.00

DEPTH	HORIZON	TEXTURE	COLOR	MOTTLING	STRUCTURE	CONSISTENCE	OTHER
+5 – 0"	O	–	–		–	–	–
0" –30"	B	SANDY LOAM	10 YR 6/7		–	–	–
30 – 96"	C1	SANDY LOAM	2.5 Y 5/3	COMMON 10 YR 6/8	–	–	5% GRAVEL
96" – 144"	Cd2	SILT LOAM	2.5 Y 5/2		–	–	

OBSERVED GROUNDWATER – NONE
ESTIMATED S.H.G.W. = 72" (ELEV. 154.0)
WEEPING FROM PIT FACE – NONE
PERC. RATE = 5 MPI @ 48"
MOTTLES @ 72" (ELEV. 154.00)
DATE OF TESTING – 7/11/01
TEST PREFORMED BY: DEAN MONSEES
TESTING WITNESSED BY: HAROLD CHENEVERT, JR., SEEKONK BOARD OF HEALTH

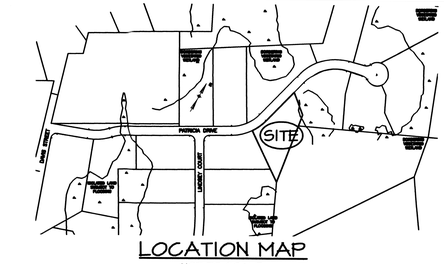

LOCATION MAP
NOT TO SCALE

NOTES:

1. WORK SHALL CONFORM TO THE 310 CMR 15.00 STATE ENVIRONMENTAL CODE - TITLE 5 AND THE RULES AND REGULATIONS OF THE SEEKONK BOARD OF HEALTH.
2. STRIP ALL TOPSOIL, SUBSOIL AND UNSUITABLE MATERIAL, TREE ROOTS AND STUMPS AND ANY OTHER IMPERVIOUS OR SPECIFIED SOIL IN THE AREA OF THE SYSTEM AND 5 FEET HORIZONTALLY BEYOND THE EDGE OF THE SYSTEM STONE IN ALL DIRECTIONS, WHERE POSSIBLE. STRIP MATERIAL VERTICALLY 3" MINIMUM INTO THE NATURALLY OCCURRING PERVIOUS MATERIAL. THE CONTRACTOR IS TO REMOVE ALL UNSUITABLE MATERIAL BELOW THE PROPOSED SOIL ABSORPTION SYSTEM PRIOR TO INSTALLATION. SEE DEEP OBSERVATION HOLES SOIL DATA FOR FURTHER INFORMATION. REPLACE WITH GRANULAR FILL MEETING THE LATEST SPECIFICATIONS OF 310 CMR 15.255(3). ACTUAL FILL MATERIAL IS SUBJECT TO APPROVAL BY THE DESIGN ENGINEER AND/OR SEEKONK HEALTH AGENT. THE DESIGN ENGINEER AND/OR THE SEEKONK HEALTH AGENT MAY ALSO REQUIRE A SIEVE ANALYSIS OF THE FILL MATERIAL.
3. UNSUITABLE MATERIAL USED TO BACKFILL THE TEST HOLES SHALL BE REMOVED AND REPLACED WITH GRANULAR FILL MEETING THE LATEST SPECIFICATIONS OF 310 CMR 15.255(3).
4. ALL PIPE TO BE 4" P. V. C. SCHEDULE 40 UNLESS OTHERWISE NOTED.
5. PLACE 6" MINIMUM COMPACTED CRUSHED STONE UNDER SEPTIC TANK, AND DISTRIBUTION BOX.
6. SOIL TESTING FOR THIS PROJECT WAS PERFORMED BY DEAN MONSEES AND WITNESSED BY THE SEEKONK BOARD OF HEALTH AGENT, HAROLD CHENEVERT, JR.. ADDITIONAL TESTING WAS PERFORMED BY CAPUTO AND WICK, LTD. AND WITNESSED BY BETH HALLAL, SEEKONK BOARD OF HEALTH AGENT. IF CONDITIONS ENCOUNTERED DURING CONSTRUCTION VARY SUBSTANTIALLY FROM THOSE SHOWN ON THIS PLAN, NOTIFY CAPUTO AND WICK, LTD. BEFORE PROCEEDING WITH CONSTRUCTION. **IF IN DOUBT, ASK.**
7. GARBAGE GRINDER IS **NOT** ALLOWED WITH THIS DESIGN.
8. INLET AND OUTLET TEES FOR SEPTIC TANK ARE TO BE **LOCATED DIRECTLY BELOW ACCESS COVERS.**
9. SEPTIC TANK AND DISTRIBUTION BOX SHALL BE DESIGNED FOR H-10, AND SHALL BE PROTECTED FROM VEHICULAR TRAFFIC BOTH DURING AND AFTER INSTALLATION.
10. IT IS RECOMMENDED THAT THE SEPTIC TANK BE INSPECTED TWICE A YEAR, AND BE CLEANED WHEN THE SOLIDS EQUAL ONE THIRD THE LIQUID DEPTH. EFFLUENT FILTER MUST BE CLEANED ANNUALLY, AT A MINIMUM.
11. BREAKOUT ELEVATION = 163.33. NO FINISHED GRADE BELOW 163.33 FOR 15 FEET (MINIMUM) FROM THE EDGE OF THE LEACHING AREA.
12. CONTRACTOR SHALL CONTACT "DIG-SAFE" PRIOR TO CONSTRUCTION. LOCATION OF UTILITIES ON THIS PLAN ARE FROM BEST AVAILABLE EXISTING INFORMATION, BUT ARE ONLY TO BE CONSIDERED APPROXIMATE.
13. EXISTING AND PROPOSED WATER WELLS FOUND WITHIN 200' OF PROPOSED SEWAGE DISPOSAL SYSTEM ARE INDICATED ON THE PLAN. EXISTING AND PROPOSED SEWAGE DISPOSAL SYSTEMS FOUND WITHIN 200' OF PROPOSED WATER WELL ARE INDICATED ON THE PLAN.
14. MATERIAL AND EQUIPMENT FROM ALTERNATE MANUFACTURERS MAY BE USED IF EQUAL. APPROVAL FOR ALTERNATE MATERIAL AND/OR EQUIPMENT REQUIRED FROM ENGINEER AND THE BOARD OF HEALTH PRIOR TO CONSTRUCTION. FULL SPECIFICATIONS FOR ALTERNATE EQUIPMENT MUST BE PROVIDED BY THE CONTRACTOR.
15. THE DESIGNER EXPRESSLY DISCLAIMS ANY RESPONSIBILITY FOR MONITORING, INSPECTING OR SUPERVISING THE ACTUAL CONSTRUCTION WORK. AFTER EXCAVATING AND PRIOR TO INSTALLING ANY IMPORTED MATERIAL, CONTACT THE BOARD OF HEALTH AGENT FOR A BOTTOM OF EXCAVATION INSPECTION. AFTER SYSTEM COMPONENTS ARE IN PLACE AND PRIOR TO BACKFILLING, CONTACT THE DESIGNER TO VERIFY THE LOCATION AND ELEVATION OF SYSTEM COMPONENTS AND PREPARE A RECORD DRAWING AS REQUIRED BY THE BOARD OF HEALTH.
16. THE DESIGNER EXPRESSLY DISCLAIMS ANY RESPONSIBILITY FOR THE INSTALLATION AND MAINTENANCE OF THE SYSTEM. IT SHALL BE THE RESPONSIBILITY OF THE INSTALLER TO CONSTRUCT THE SYSTEM IN ACCORDANCE WITH 310 CMR 15.00 AND LOCAL BOARD OF HEALTH REGULATIONS AND THE RESPONSIBILITY OF THE OWNER FOR PROPERLY MAINTAINING THE SYSTEM IN ACCORDANCE WITH 310 CMR 15.00 AND THE LOCAL BOARD OF HEALTH REGULATIONS.
17. REFER TO 310 CMR 15.00 AND THE LOCAL BOARD OF HEALTH REGULATIONS FOR ADDITIONAL INFORMATION CONCERNING THE CONSTRUCTION AND OPERATION OF THE SYSTEM. THE INSTALLER AND OWNER SHOULD REVIEW AND APPLY 310 CMR 15.00 AND THE LOCAL BOARD OF HEALTH REGULATIONS SYSTEM TO BE CONSTRUCTED BY A INSTALLER LICENSED BY THE SEEKONK BOARD OF HEALTH.
18. FILL MEETING THE REQUIREMENTS OF 310 CMR 15.255(3) MUST BE PLACED ON SCARIFIED, RELATIVELY DRY NATURAL SOIL. THE CONTRACTOR SHALL PROVIDE FOR DEWATERING AS REQUIRED AND ALL WORK SHALL BE PERFORMED UNDER DRY CONDITIONS PER 310 CMR 15.255(6).
19. THE CELLAR FLOOR ELEVATION SHOWN HAS BEEN SUGGESTED AS A MINIMUM BASED ON OBSERVED GROUNDWATER CONDITIONS. SINCE THE GROUNDWATER LEVELS FLUCTUATE ANNUALLY, NO WARRANTY OF A DRY CELLAR IS EXPRESSED OR IMPLIED.
20. INSTALL MAGNETIC TAPE OVER ALL PIPE AND SYSTEM COMPONENTS.
21. PLAN EXISTING GRADES MAY VARY FROM ORIGINAL GRADES DUE TO SUBDIVISION CONSTRUCTION ACTIVITY.
22. CONTRACTOR MUST BE FAMILIAR WITH CHAMBER PRODUCTS PROPOSED FOR THIS SITE. SEE INFILTRATOR INSTALLATION MANUAL FOR ADDITIONAL DETAILS OF CHAMBER INSTALLATION.

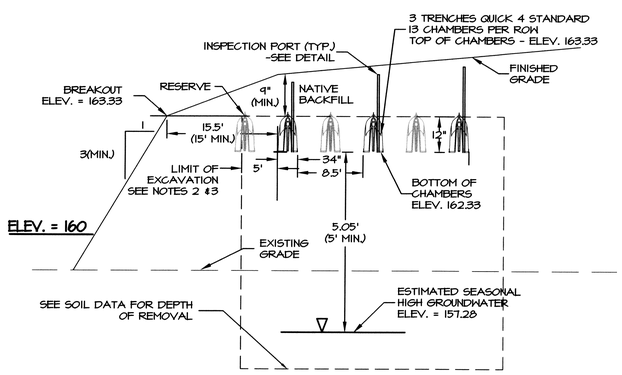

.QUICK4 STANDARD CHAMBER TRENCH SECTION DETAIL

SCALES { HORIZONTAL 1"=10' / VERTICAL 1"=2'

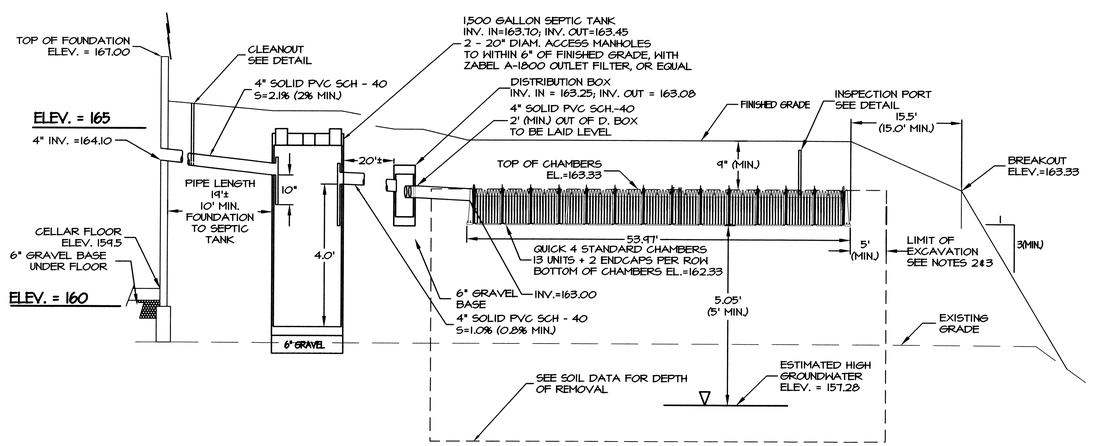

.QUICK4 STANDARD CHAMBER TRENCH PROFILESECTION DETAIL

SCALES { HORIZONTAL 1"=10' / VERTICAL 1"=2'

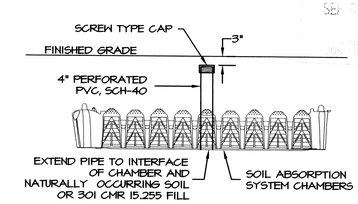

INSPECTION PORT DETAIL
NOT TO SCALE

LEGEND

---100----	EXISTING CONTOUR
—(100)—	PROPOSED CONTOUR
MA. STD.	MASSACHUSETTS STANDARD
INV.	INVERT OF PIPE
P. V. C.	POLYVINYL CHLORIDE PIPE
S. D. R.	STANDARD DIMENSION RATIO
R. C. P.	REINFORCED CONCRETE PIPE
CONC.	CONCRETE (BIT. OR P. C.)
BIT.	BITUMINOUS
P. C.	PORTLAND CEMENT
TYP.	TYPICAL
F.G. 100x00	FINISHED SPOT GRADE
100x00	EXISTING SPOT GRADE
T. C.	TOP OF CURB
B. C.	BOTTOM OF CURB
℄	PROPERTY LINE
-x-CLF-x-	CHAIN LINK FENCE
ST	SEPTIC TANK
DB	DISTRIBUTION BOX
CO	CLEAN OUT
	DEEP OBSERVATION HOLE
	PERCOLATION TEST HOLE

I CERTIFY THAT I HAVE CONTACTED THE SEEKONK WATER DISTRICT FOR THE LOCATION OF THE EXISTING WATER SERVICE CURB STOP FOR PLAT 26, LOT 168 AND WAS INFORMED THAT THERE IS NO CURB STOP CURRENTLY FOR THIS LOT. THE PROPOSED DWELLING WILL BE SERVED BY A PRIVATE WELL TO BE INSTALLED IN CONFORMANCE WITH THE SEEKONK BOARD OF HEALTH REGULATIONS.

LOT INFORMATION
15 PATRICIA DRIVE
ASSESSORS PLAT NO. 26, LOT 168
HOLLAND WOODS LOT 12
ZONE – R-4
AREA = 64,471 S.F.
OWNER: H. CHARLES TAPALIAN

COMMONWEALTH OF MASSACHUSETTS
ALLAN L. SHEAR
CIVIL
No. 35256
REGISTERED PROFESSIONAL ENGINEER

SEWAGE DISPOSAL SYSTEM
15 PATRICIA DRIVE
ASSESSORS PLAT 26 - LOT 168
SEEKONK, MASSACHUSETTS

CAPUTO AND WICK LTD.
1150 PAWTUCKET AVE.
RUMFORD, R.I. 02916
401-434-8880

DATE: AUGUST 2014
SHEET: 1